Oct. 26, 1954 G. KRAMER Des. 173,314

ENGINE-BESIDE-CAB TRUCK

Filed March 29, 1954 3 Sheets-Sheet 1

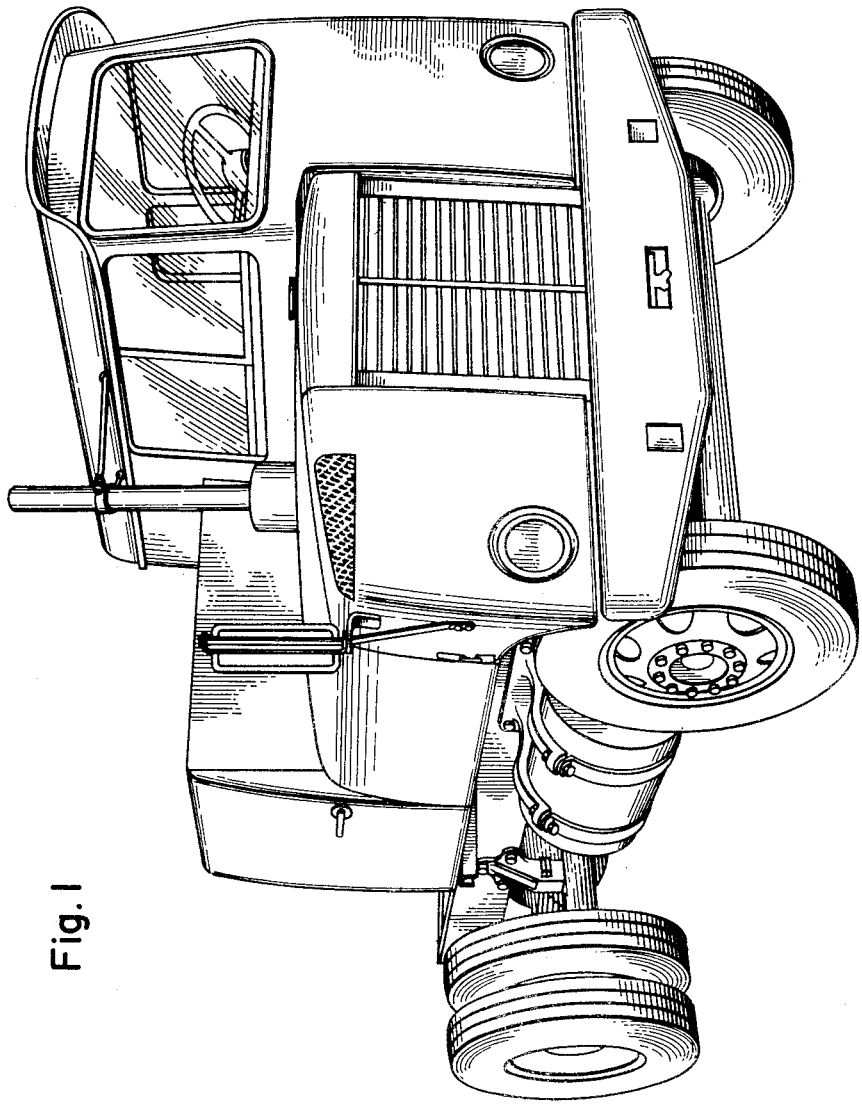

Fig. 1

INVENTOR.
Gideon Kramer

BY

Barnes, Seed & Secrest
attys

Oct. 26, 1954 G. KRAMER Des. 173,314

ENGINE-BESIDE-CAB TRUCK

Filed March 29, 1954 3 Sheets-Sheet 2

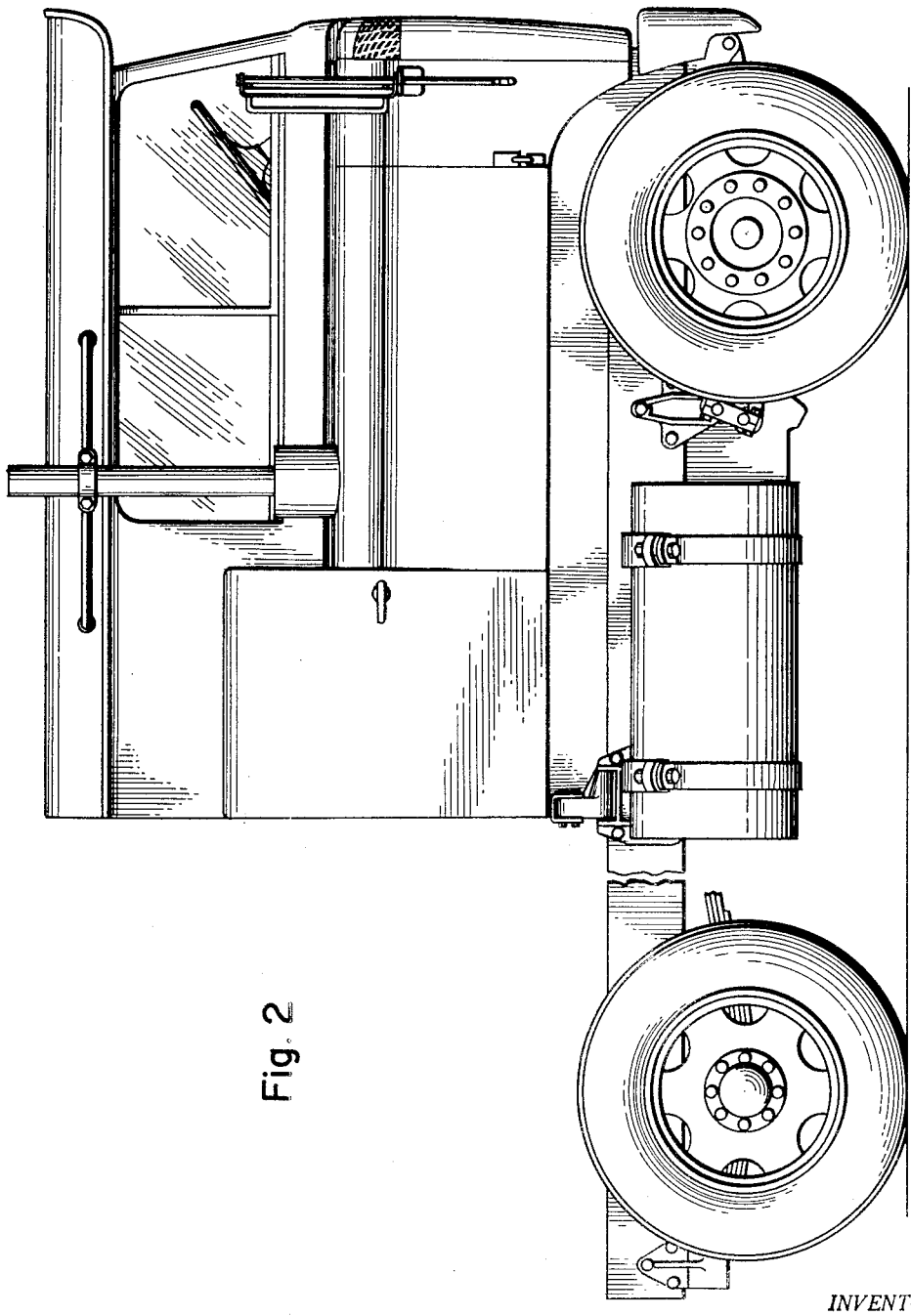

Fig. 2

INVENTOR.

Gideon Kramer

BY

Barnes, Seed & Secrest
Atty's

Oct. 26, 1954 G. KRAMER Des. 173,314

ENGINE-BESIDE-CAB TRUCK

Filed March 29, 1954 3 Sheets-Sheet 3

Fig. 3

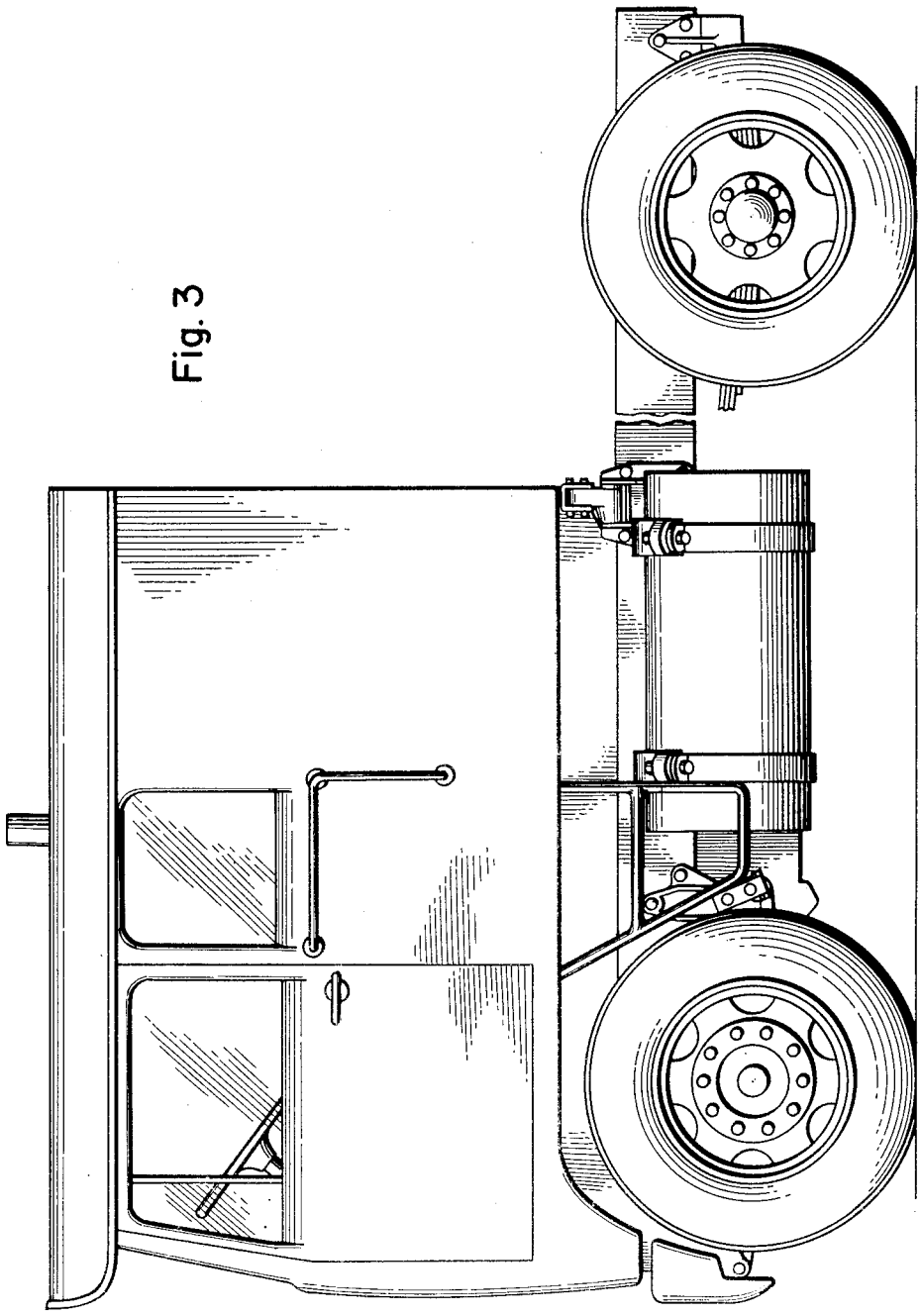

INVENTOR.
Gideon Kramer

BY

Barnes, Seed & Secrist
att'ys

Patented Oct. 26, 1954

Des. 173,314

UNITED STATES PATENT OFFICE

173,314

ENGINE-BESIDE-CAB TRUCK

Gideon Kramer, Seattle, Wash., assignor to Kenworth Motor Truck Corporation, Seattle, Wash., a corporation of Washington

Application March 29, 1954, Serial No. 29,715

Term of patent 14 years

(Cl. D14—3)

To all whom it may concern:

Be it known that I, Gideon Kramer, a citizen of the United States of America, and a resident of Seattle, county of King, and State of Washington, have invented a new, original, and ornamental Design for an Engine-Beside-Cab Truck, of which the following is a specification, reference being had to the accompanying drawings, forming a part thereof.

In said drawings:

Figure 1 is a perspective view of an engine-beside-cab truck showing my new design; and

Figs. 2 and 3 are each fragmentary side elevational views thereof.

I claim:

The ornamental design for an engine-beside-cab truck, as shown.

References Cited in the file of this patent

UNITED STATES PATENTS

Number	Name	Date
D. 126,643	Strong	Apr. 15, 1941
D. 168,576	Lee	Jan. 6, 1953
D. 171,225	Prichard	Dec. 29, 1953